Mounting bracket preparation

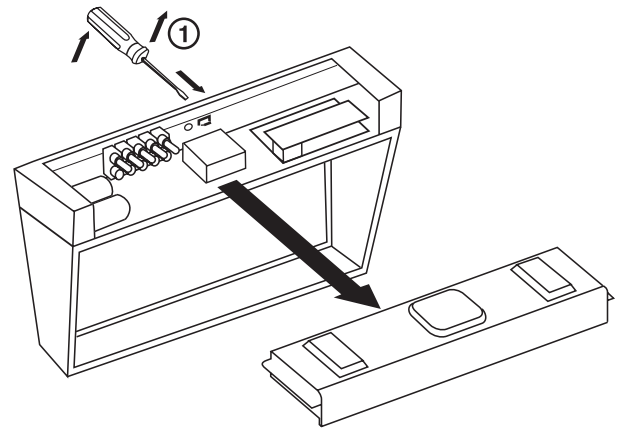

1 To release fitting from bracket

Ceiling mount

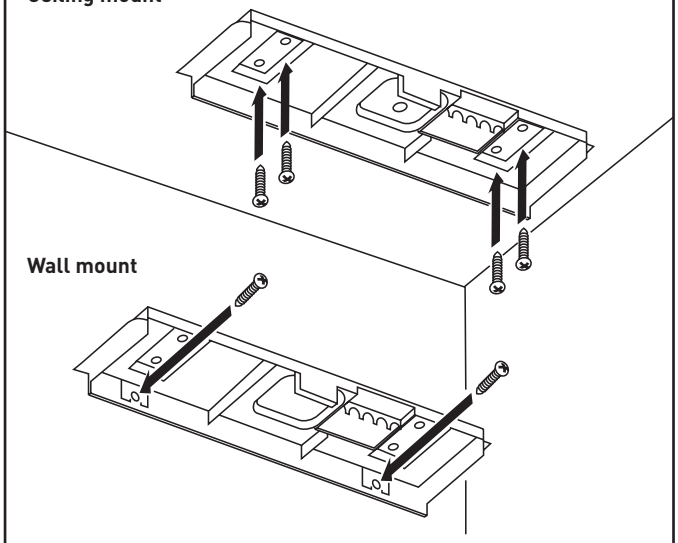

Mains supply connection

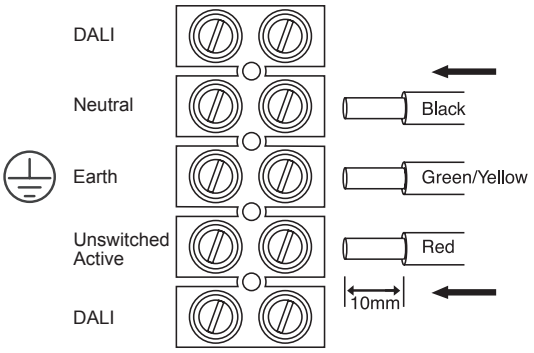

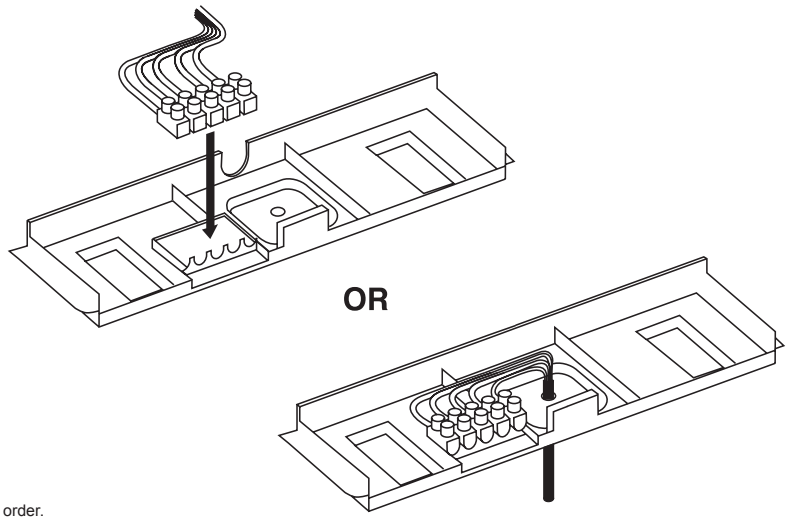

NOTE: 1. This sign is configured for maintained operation only.
Non-maintained (switched active) operation is available by special order.
2. DALI terminal connection is applicable to DALI models only.

Body assembly/Ceiling installation

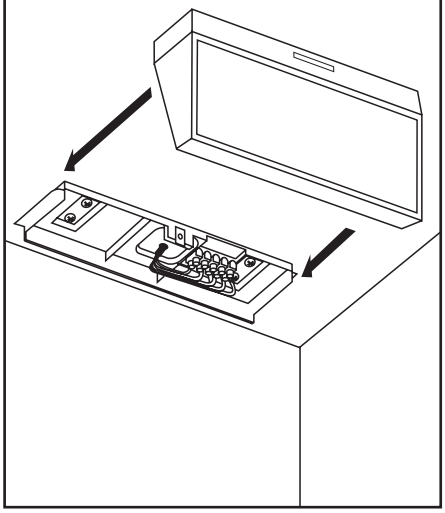

Diffuser installation

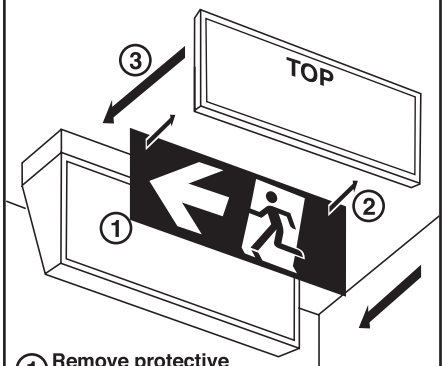

1 Remove protective film from legend

2 Mount legend on cover

3 Mount cover on frame with 'TOP' facing up

Wall cantilever installation

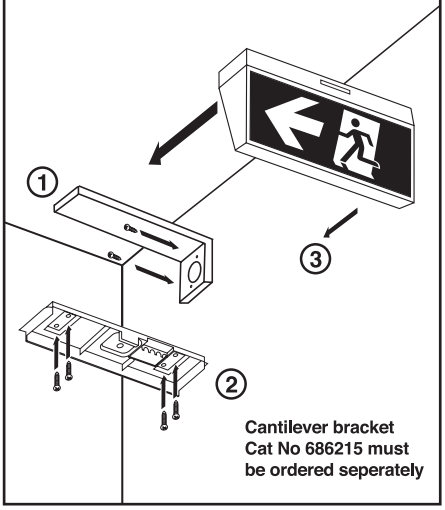

Cantilever bracket Cat No 686215 must be ordered seperately

LE09669AA